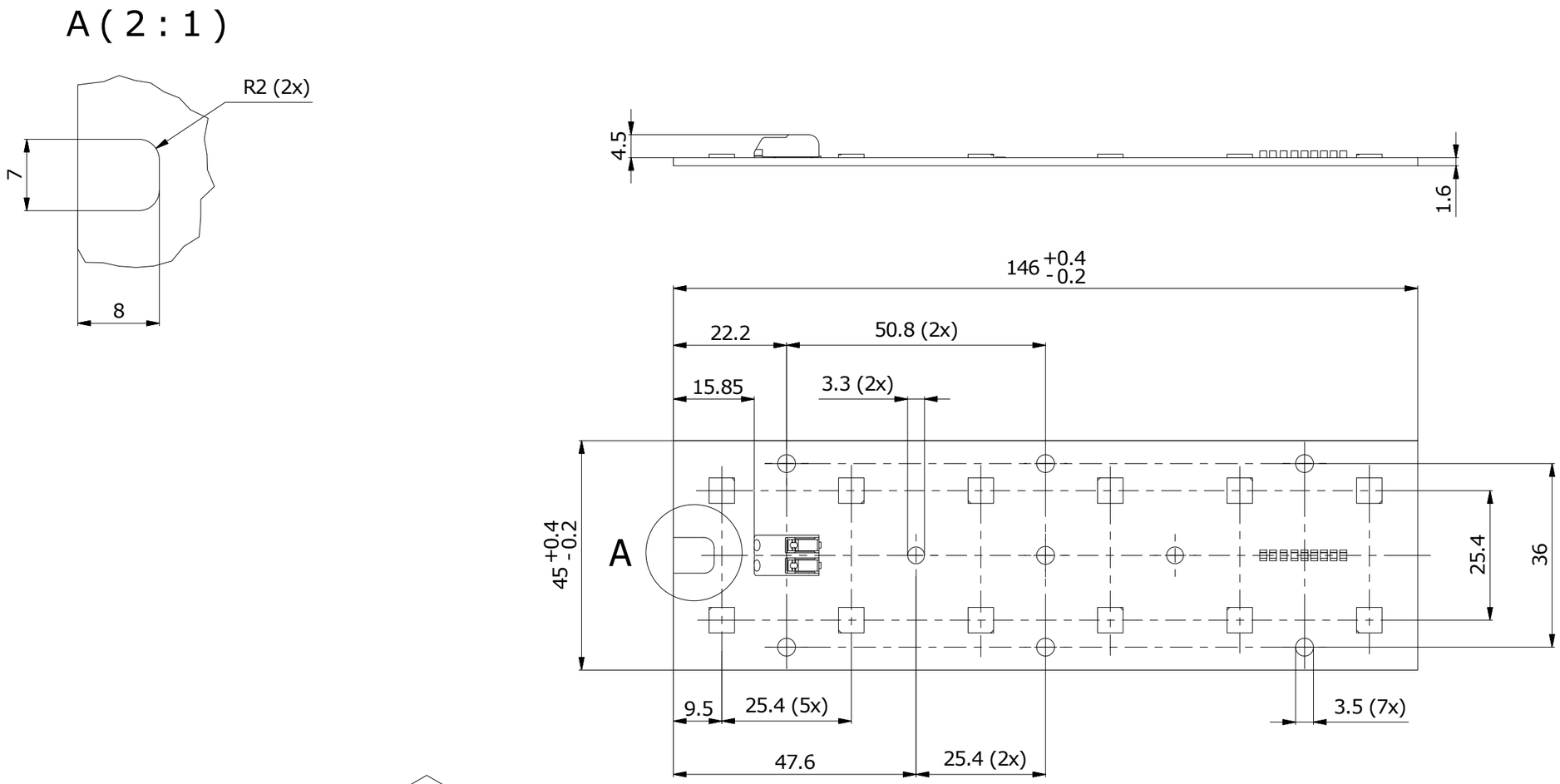

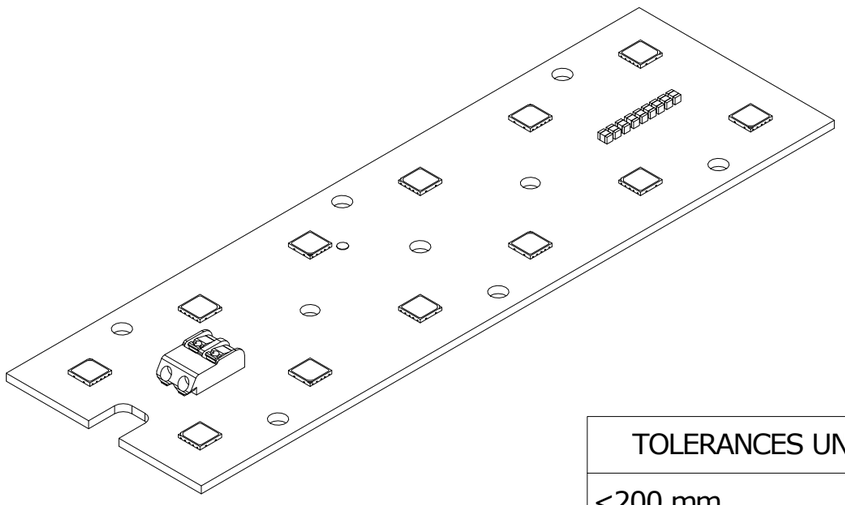

3D file available: Fortimo FastFlex LED 2x6 DP HE 2021-09-03.stp

TOLERANCES UNLESS OTHERWISE STATED	
<200 mm	±0.20 mm
≥200 mm <400 mm	±0.25 mm
≥400 mm <600 mm	±0.30 mm
≥600 mm	±0.40 mm

Confidential	TOLERANCES UNLESS OTHERWISE STATED DIMENSION See table tol. ANGLE ±1°	ASSEMBLY NO.	ITEM
GENERAL ROUGHN.	UNIT mm	MATERIAL	PATTERN NO.
SCALE 1:1	1st Angle PROJ	TREATMENT	ORDER NO. / QUANT.
CLASS NO.	Fortimo FastFlex LED 2x6 DP HE	9290 034 02000	2021-05-20 2021-08-10 2021-08-26 2021-09-03
NAME K. Lysanowicz	SUPERS.	1 SH. SH. 112 - 1	123420 A3
DATA FMT.	PROGR.	PLATF.	
CAD	CHECK	DATE 20.05.2021	© 2018 Signify Holding

All rights are reserved. Reproduction in whole or in part is prohibited without the written consent of the copyright owner.

Drawing lay-out according UN-D 1041